Compact Rotator
Type 716HR-2-SAE 1“

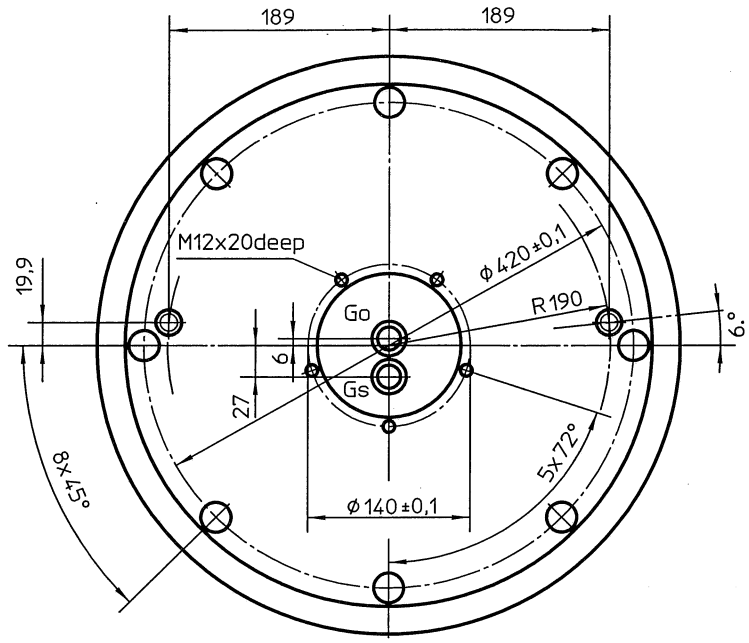

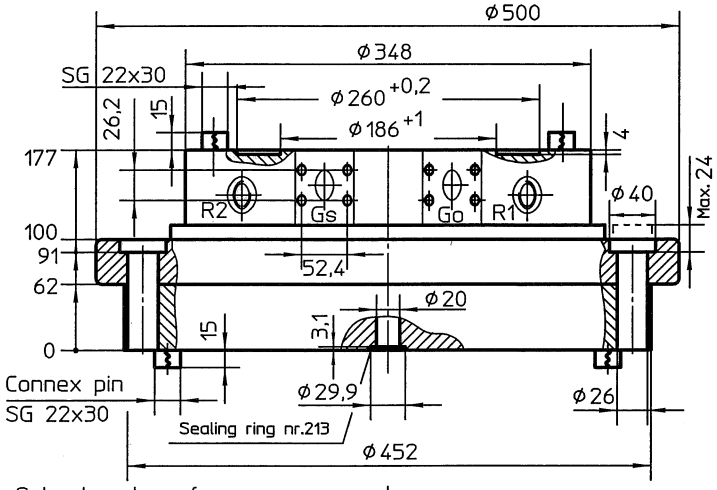

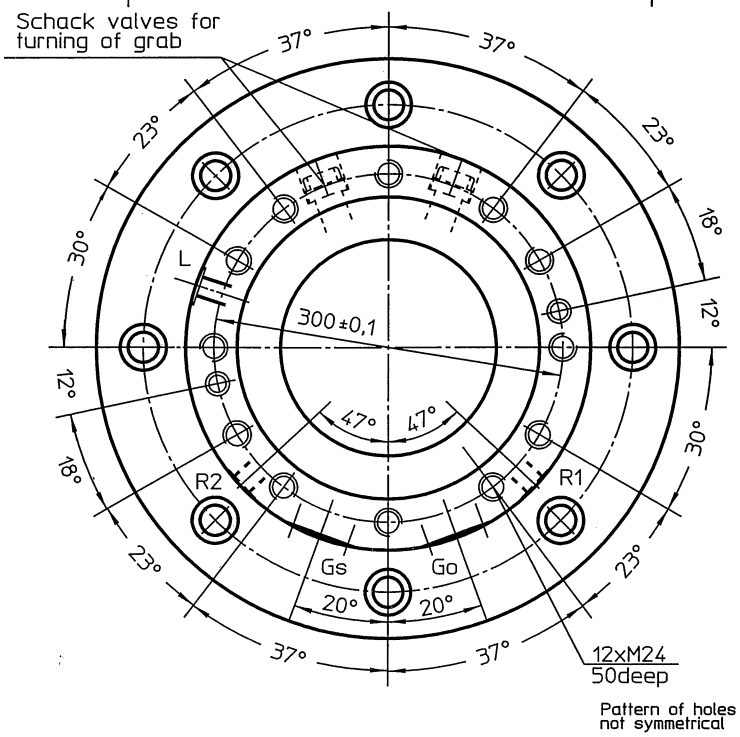

Variants of design:

Stator with scew thrend 12xM24
Fitting dimensions same as:
Rotator type 716HC-2-SAE 1" and
type 716HC-1-SAE 1" (6xM24)

Machine:

e.g.hydraulic excavator service weight:
max. 40ts. with floating attachment
max. 30ts. with rigid attachment

Add-on units:

Clamshell buckets of max. 2,5m^3
Grapples of max. 1,2m^3
Grabs for demolition and sorting
of max. 1,5ts. dead load
Sorting units (please ask manufacturer)

Technical details:

max. thrust load	= 200 KN
max. radial load	= 180 KN
Pmax. grab	= 35MPa
Pmax. rotating engine	= 20MPa
Torque / 1MPa	= 250Nm
Absorption volume	= 2200cm^3/R
min. oil passage Gs/Go	= NW18
Mass	= 163kg
max. rotations	= 30rpm

max.transverse moment: refer to 4.716.00

Volume of delivery:

2 sealing ring nr.	213
4 Connex pin	SG 22x30

Connections:

R1,R2:	turn rotator	G 1/2"
Go:	open grab	SAE 1" 3000psi
Gs:	close grab	SAE 1" 3000psi
L:	Measuring conn.	G 1/2"

oildistributor flage dimension Ö3

Edition **035** Gm.

Paint: black primary coat

Reserve made to modifications

All rights reserved

This invalidates any former dimensioned sheets